CAD FILE:

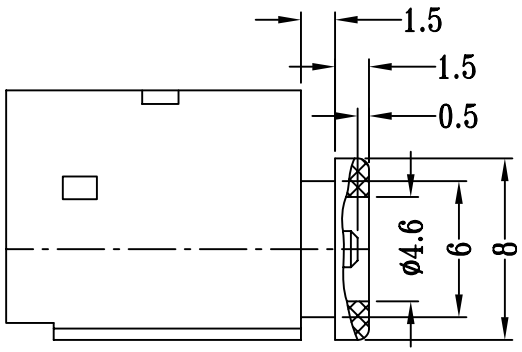

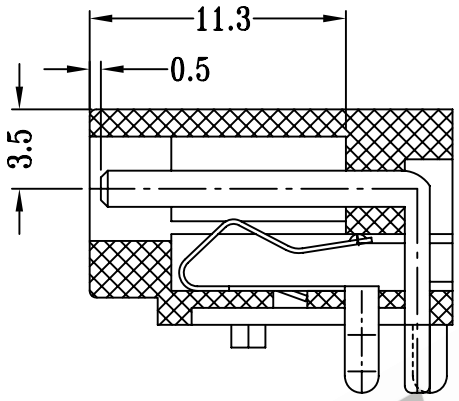

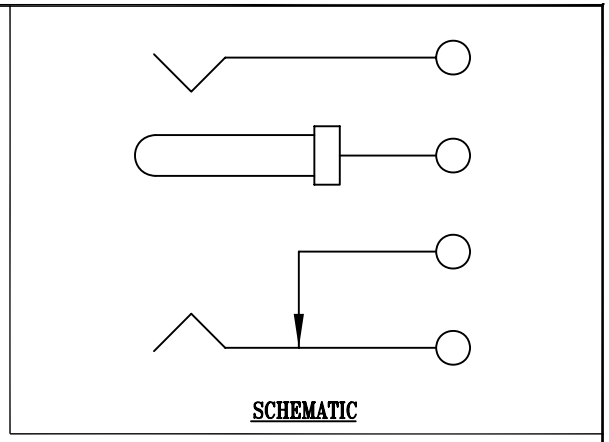

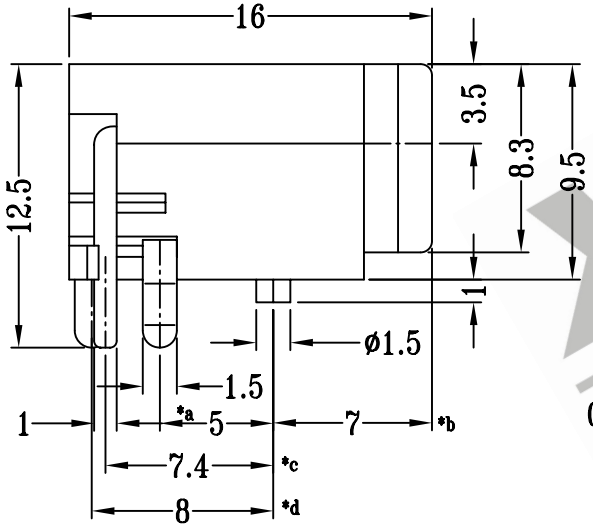

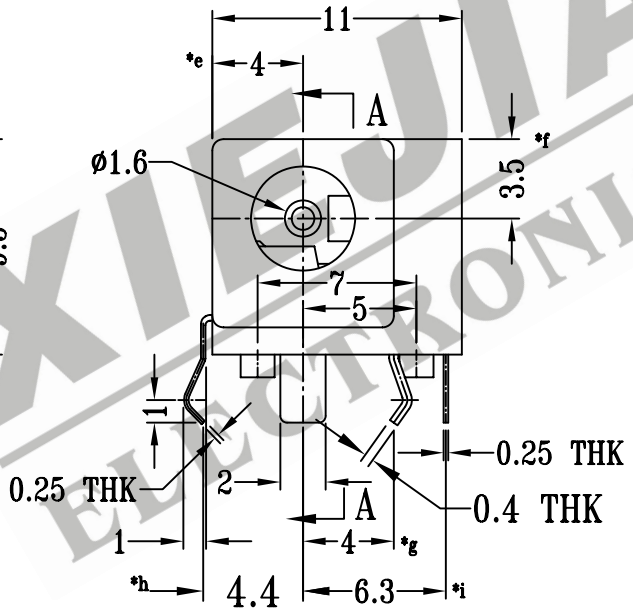

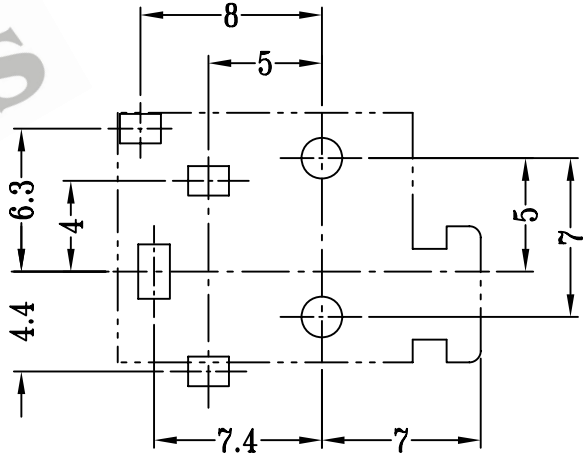

P.C.B LAYOUT

注:带"*"表示关键尺寸(9个)

XIEJIA ELECTRONICS

NO.	PART NAME	MATERIAL	Q'TY	FINISHING
8				
7				
6	PLATE	POM	1	WHITE
5	CASE	NYLON+F.G	1	BLACK
4	SPRING TERMINAL B	BRASS STRIP	1	Ag PLATED OVER Ni PLATED
3	TERMINAL C	BRASS STRIP	1	Ag PLATED OVER Ni PLATED
2	PLUG PIN	BRASS	1	Ag PLATED OVER Ni PLATED
1	SPRING TERMINAL A	PBS STRIP	1	Ag PLATED OVER Ni PLATED

TOLERANCE UNLESS SPECIFIED
WITHIN: 1.5±0.1mm
OVER : 1.5±0.2mm

SHENZHEN XIEJIA ELECTRONICS CO.,LTD.

ISSUE	DATE	DESCRIPTIONS	APPD.

TITLE : DC POWER JACK
UNIT : MM
DRWG NO.: XJ-DR-DS414-00
MODEL: DS-414
SCALE: 3:1

DWN.	ZHOUYU	2004-9-30
CHK'D	FANGYING	2004-9-30
APPD.	KANGXINAN	2004-9-30

ALL MATERIALS MUST BE COMPLIANT TO ROHS